ELITE 1000 PLUS LE

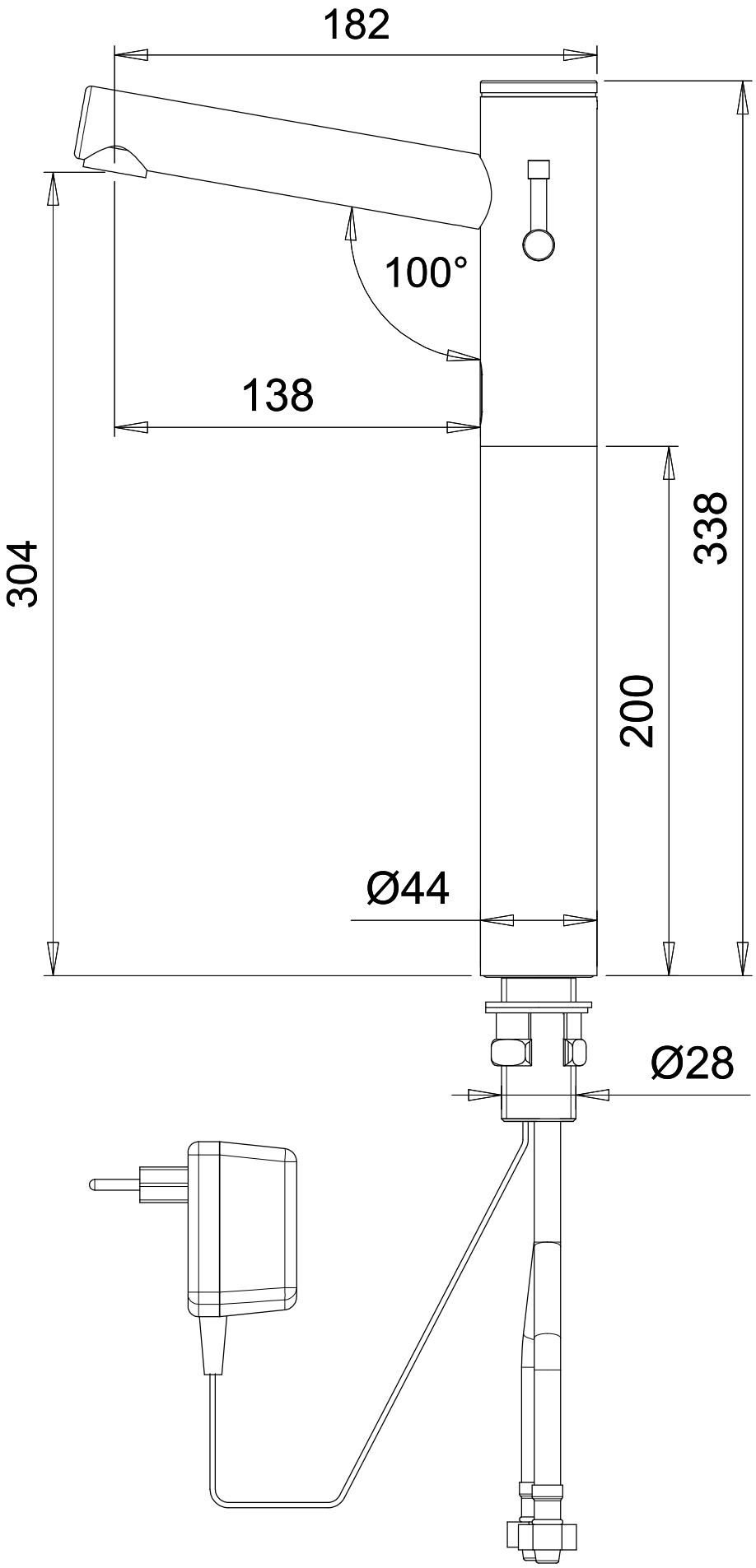

Y.STERN ENGINEERING LTD.